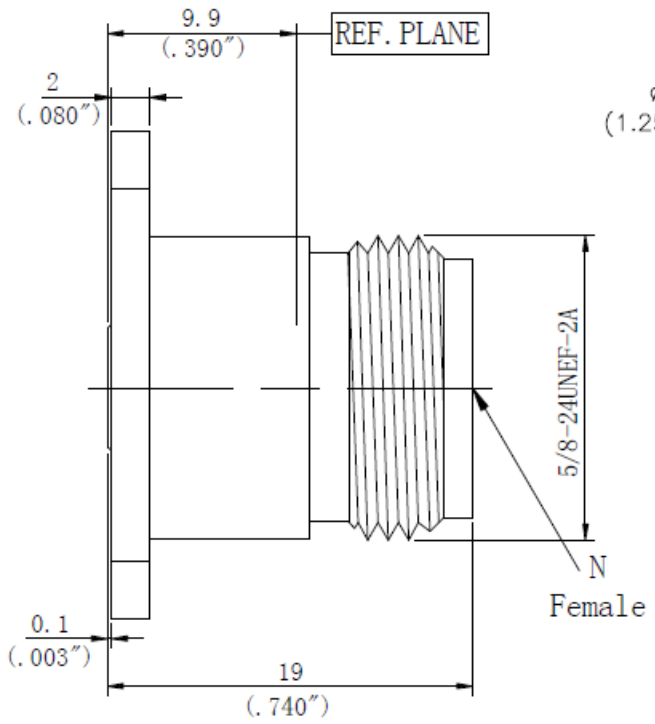

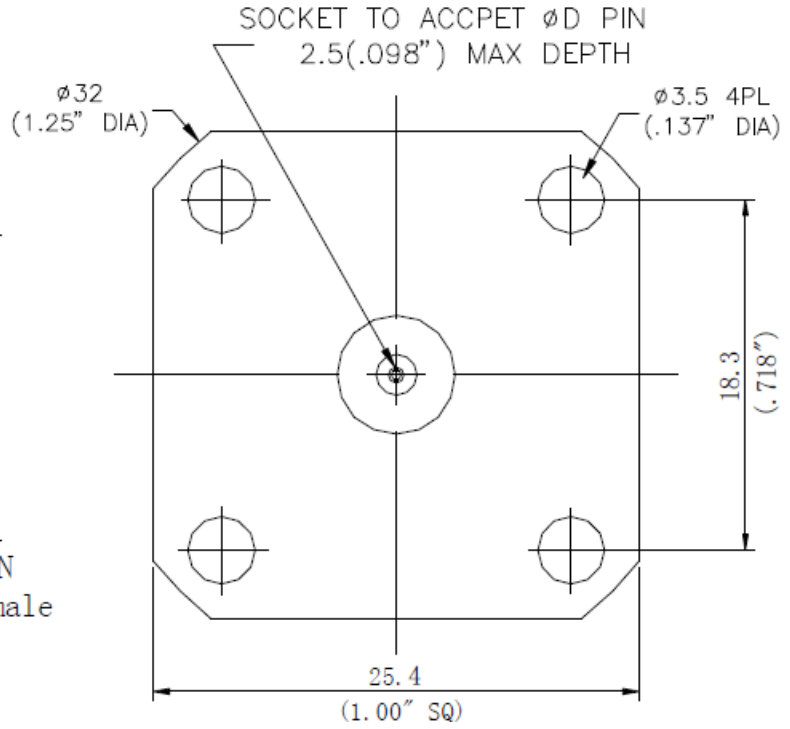

Part Number	Pin Diameter D
340P20F10	0.51mm / 0.020"
340P36F10	0.91mm / 0.036"

Specifications:

Impedance= 50 Ω
Frequency= DC - 18 Ghz
VSWR : DC - 18 Ghz = 1.15:1 max
Contact Resistance: Center Contact ≤ 1.0 mΩ
Contact Resistance: Housing ≤ 0.2 mΩ
Insulation Resistance ≥ 5000 MΩ
Dielectric Withstanding Voltage = 1500 V
Durability = 500 cycles
Temperature Range= -55 ºC - +165 ºC
Interfaces: **PER MIL-STD-348A**

Material / Finish

Housing: Stainless Steel SU303 Polished / Passivated
Center Condact: Beryllium Copper Gold plated (MIL-G-45204)
Insulators:PTFE and PEI

SigaTek

423 Black Oak Ridge Rd.
Wayne, NJ 07470
Ph: 973-706-8475, Fax: 973-832-4435
www.sigatek.com

340P20F10
340P36F10

N Type Female Connectors

Dimensions are in inches and (mm)
Decimal Tolerance:
2 place +- 0.020
3 place +- 0.010

CAGE CODE : 69UC1

Notes: All dimensions are typical unless they are specified.
Specifications are subject to change at any time without any notice.
Copy or distribution of this drawing in not allowed without Sigatek's approval.